NOTE: Two different types of glue are required to assemble this kit. A household type "white" glue is required for paper tube and balsa glue joints. A tube-type plastic model cement is required for gluing plastic to plastic or plastic to paper tubes or balsa. Both types of glue are necessary and cannot be substituted for each other.

STAR WARS T.M.

MAXI X-WING Fighter

ESTES®
A SUBSIDIARY OF DAMON

KIT NO. 1302

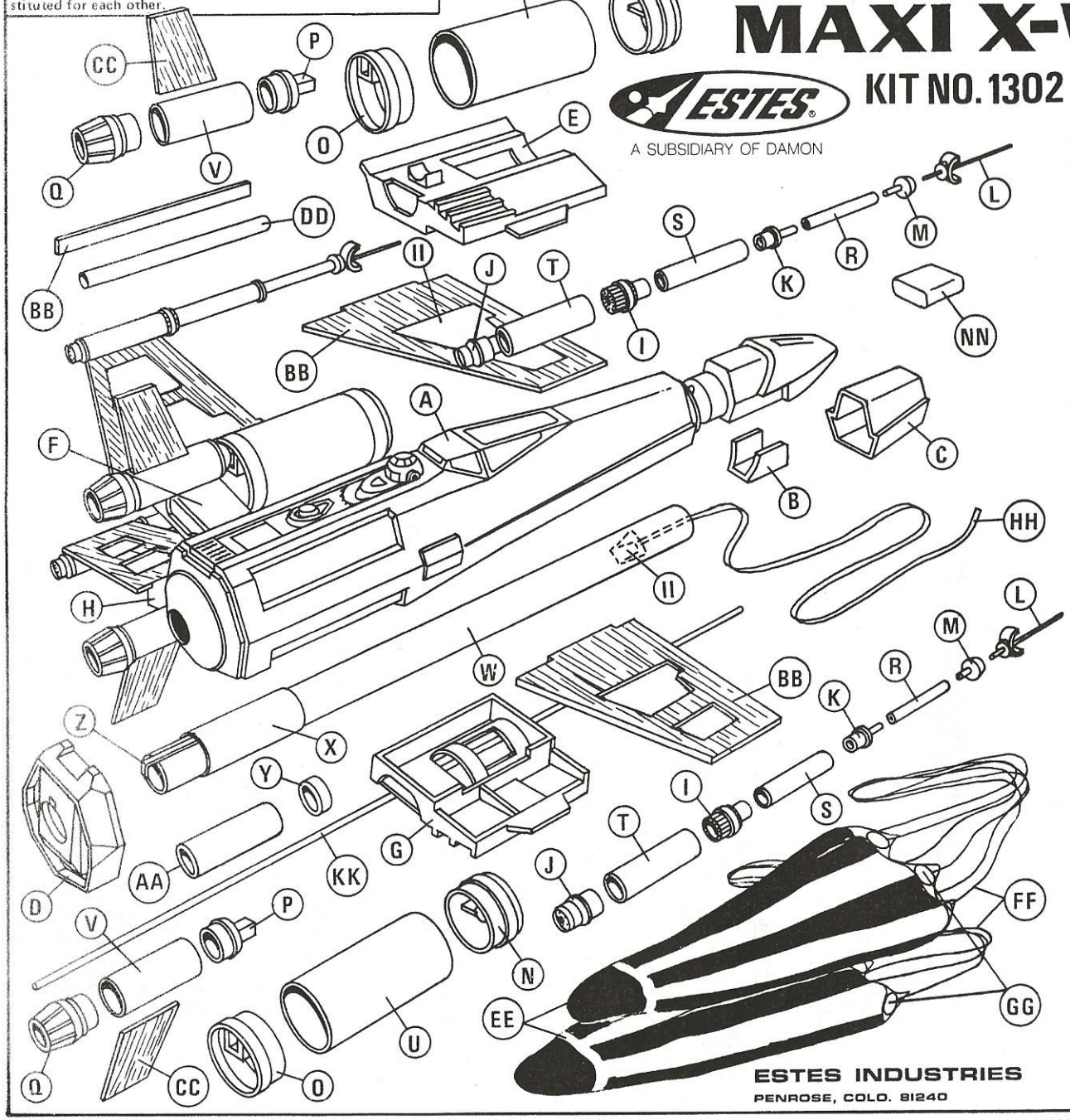

PARTS LIST

A)	1	Fuselage	33135
B)	1	Fuselage Nose Extension	33130
C)	1	Fuselage Front Cap	33131
D)	1	Fuselage Rear Cap	33132
E)	1	Right Top Wing Saddle	33117
F)	1	Left Top Wing Saddle	33118
G)	1	Right Bottom Wing Saddle	33119
H)	1	Left Bottom Wing Saddle	33120
I)	4	Laser Radiator	33121
J)	4	Laser Cap	33122
K)	4	Barrel Coupler	33123
L)	4	Laser Probe	33124
M)	4	Probe Coupler	33125
N)	4	Engine Inlet	33126
O)	4	Engine Rear Cap	33127
P)	4	Afterburner Coupler	33128
Q)	4	Afterburner Nozzle	33129
R)	4	Barrel Extension Tube (type BT-2XW)	30299
S)	4	Laser Barrel Tube (type BT-3H)	30300
T)	4	Laser Body Tube (type BT-30XW)	30347
U)	4	Engine Tube (type BT-60XW)	30419
V)	4	Afterburner Tube (type BT-50J)	30362
W)	1	Fuselage Body Tube (type BT-50XW)	30371
X)	1	Retainer Tube (type BT-52AG)	30378
Y)	1	Engine Block (type AR-2050)	30164
Z)	1	Engine Holder (type EH-2)	35025
AA)	1	Engine Casing (type EC-6)	35012
BB)	2	Balsa Wing Sheet (type BF-1302A)	32315
CC)	1	Balsa Fin Sheet (type BF-1302B)	32316
DD)	1	Launch Lug (type LL-MXW)	38165
EE)	2	Parachute (type PK-18A)	85566
FF)	2	Shroud Lines (type SLT-108)	38239
GG)	2	Tape Discs (type TD-3F)	38406
HH)	1	Shock Cord (type SC-2MJ)	85738
II)	1	Printed Wing Covers & Shock Cord Mount	84077
JJ)	1	Decal Sheet (Not Shown)	37107
KK)	1	Dowel	32056
LL)	1	Sheet of Engine Wrappers (Not Shown)	37700
MM)	1	Gluing Template (Not Shown)	84067
NN)	1	Clay Weight	85264
OO)	1	Display Stand (Not Shown)	32941

MATERIALS NEEDED TO COMPLETE THIS KIT

1. Modeling knife with sharp blade. 2. Fine (#320-#400 grit) sandpaper. 3. Tube-type plastic model cement (do not substitute liquid plastic cement for this). 4. Household "white glue" for gluing wood or all porous materials. 5. Flat white spray enamel. 6. Small bottle of light blue enamel. 7. Small (#0-#1) brush. 8. Masking tape. 9. Balsa sanding sealer.

ESTES INDUSTRIES
PENROSE, COLO. 81240

Copyright © 1977 Twentieth Century-Fox Film Corporation. All Rights Reserved. Trademarks owned by TWENTIETH CENTURY-FOX FILM CORPORATION and used by ESTES INDUSTRIES, INC. under authorization.

IMPORTANT:

Points to remember during assembly:

A. Test fit each part before gluing.

B. Use only the type cement called out in each step. The specific cementing procedures are important, follow them carefully.

C. Trim - do not break - the plastic parts from the round casting sprues to which they are attached. Carefully trim or sand away any fine bits of excess plastic that may be present along the edges of the parts.

D. Some steps require time delay for cement to dry. You may wish to skip ahead and work on a different component while the glue dries, i.e., assemble parachute, seal and sand fins, etc.

E. Paper body tubes sometimes have a small flange on the inside edges of the ends. When test fitting a plastic part into a tube, do not force the fit. Lightly sand the inside edge of the tube to remove the flange and provide a good slip fit.

ASSEMBLY INSTRUCTIONS

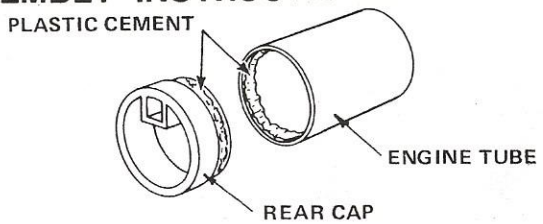

☐ **1** Locate four engine rear caps (part O) and four engine tubes (part U). Lightly sand the inside edges of the tubes, if necessary, so the caps fit easily into the tubes. Apply a thin film of plastic cement to the inside of one end of each tube. Let dry. Apply a second thin film of cement to the inside of each tube and to the gluing flange on the cap. Push parts together and wipe away any excess cement.

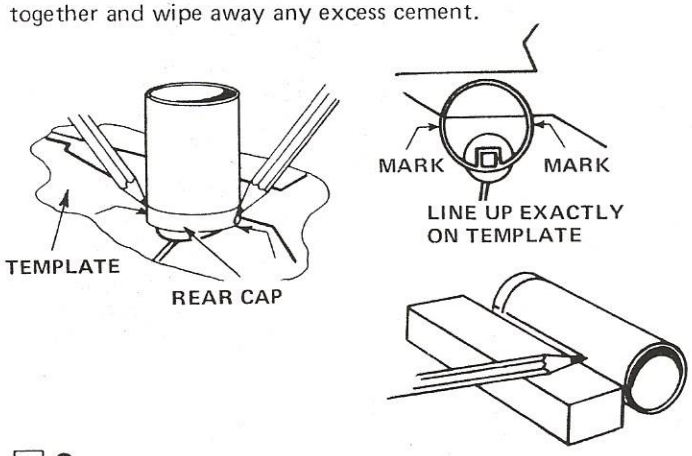

☐ **2** Place the gluing template (part MM) on a flat surface. Lay each assembly, in turn, over the indicated portion of the template with the cap down. Line up the opening in the cap exactly over the identical lines of the template. Place a mark on each side of the cap where indicated. Using a door frame or piece of wood as a guide, draw a line from the marks along both sides of each tube.

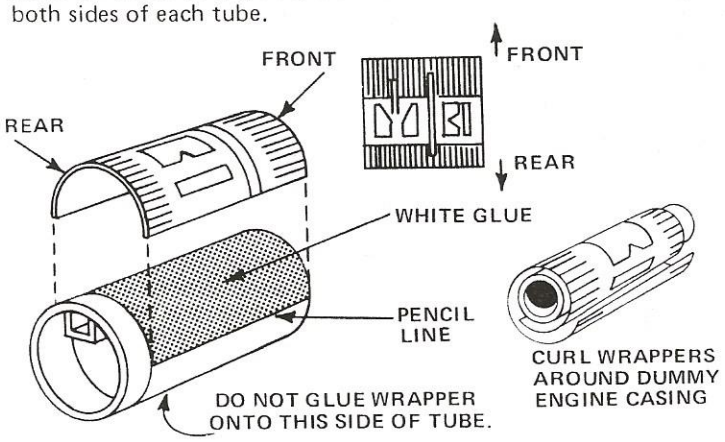

☐ **3** Locate the sheet of engine wrappers (part LL). Carefully cut the tabs holding the wrappers in the sheet. Pre-curl the wrappers so they conform to the shape of the tubes. Note before gluing that there is a front and rear to each wrapper. The cap is at the rear of the wrapper. The wrapper is glued onto the tube and does not extend over the cap. Also, the square opening in the cap is lined up in the middle of the wrapper. Be careful not to glue wrapper on the wrong side. Apply a thin film of white glue to the portion of an engine tube within the pencil lines and attach wrapper. Carefully align the wrapper and hold in place until the glue sets. Repeat with remaining wrappers and tubes.

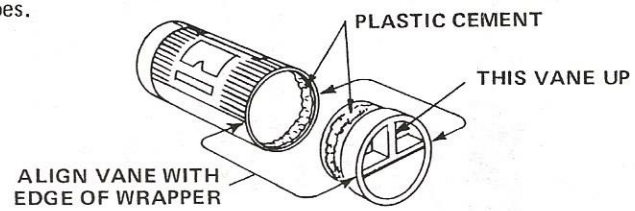

☐ **4** Locate four engine inlets (part N). Attach to front of tubes using the gluing procedure outlined in step #1. Note that the cross vanes of the inlets are aligned with the edges of the wrappers and the upright vanes are aligned with the centers of the wrappers. Do not attach inlet upside down.

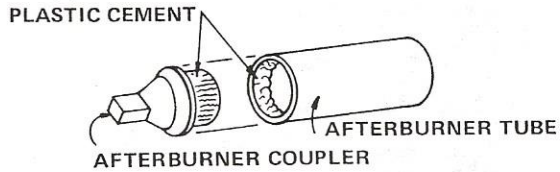

☐ **5** Locate four afterburner couplers (part P) and four afterburner tubes (part V). Using gluing procedures outlined in step #1, attach the couplers to the tubes. Let dry completely.

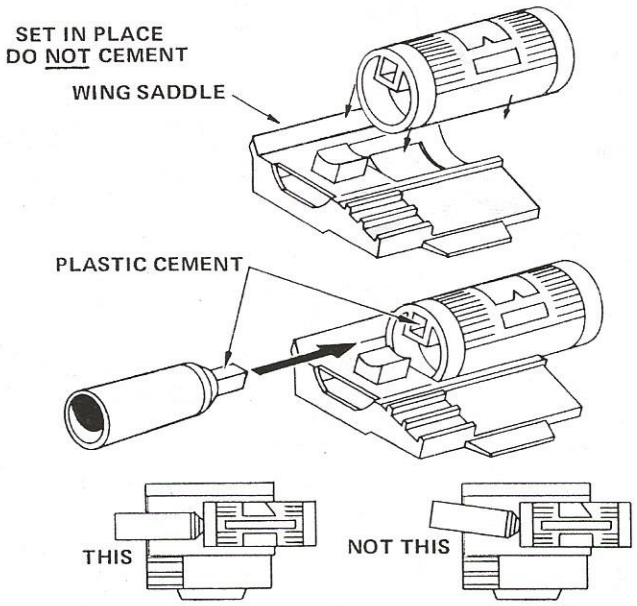

☐ **6** Locate four wing saddles (parts E, F, G, and H). Lay an engine assembly into the recess of a wing saddle as shown. Do not glue in place. Apply plastic cement around the inside of the square opening in the rear cap and around the shank of the coupler on one of the afterburner assemblies. Push the coupler shank into the square opening. Note that the afterburner tube nests into a raised socket on the wing saddle. Holding the tube in the socket, slightly rotate the engine tube, if necessary, to obtain perfect alignment. Set this assembly aside to dry and repeat process with remaining parts. When cement has thoroughly dried, remove an engine unit from its saddle. Apply a thin film of plastic cement to the "bottom" of the engine and afterburner tubes where they will contact the plastic saddle. Let the cement dry. Apply a second thin film

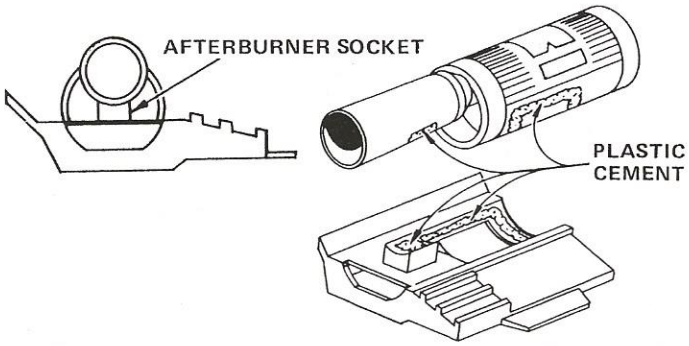

of cement to these areas and to the mating surfaces of the wing saddle. Press the parts together. Check alignment and adjust if necessary. Set the assembly aside and repeat with three remaining units.

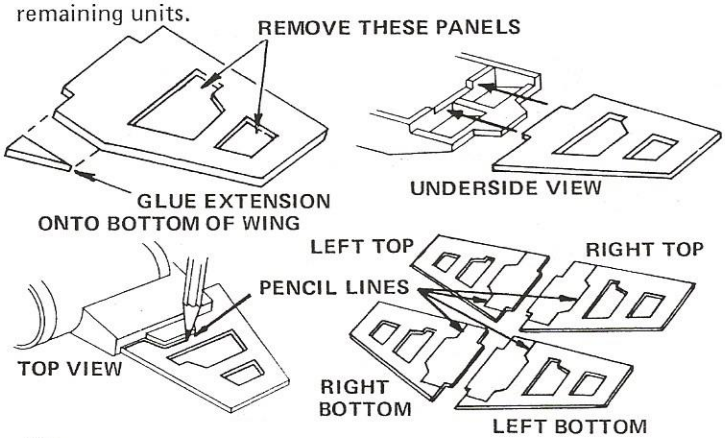

☐ **7** Locate the two die-cut wing sheets (part BB). Use a sharp knife to free the wings from the sheets and to remove the cut out panels from the wings. Remove the small triangular pieces from the sheets and, using white glue, glue these to the bottoms of the wings as shown. Allow glue to dry. Lightly sand both sides and all edges of each wing. Keep all edges square and do not round any corners with the sanding operation. Select one of the wing saddles and position a wing into the saddle as shown. Note how the tab on the end of the wing keys into a recess in the underside of the saddle. Turn the unit over and, holding the wing in place, draw a pencil line on the wing along the edges of the saddle. Repeat this step with a second wing. Using a saddle opposite to the one just used, trace a line on the two remaining wings. You should wind up with two right and two left wings as shown.

Apply a coat of sanding sealer to all surfaces of each wing except the areas shown. Do not get sealer on these areas since they are gluing surfaces. Allow the sealer to dry completely, then sand all surfaces. Don't forget to sand the inside edges of the panel openings. Be careful to keep all corners square. After thoroughly sanding each wing, apply a second coat of sealer and let dry. Sand each wing again until it feels very smooth.

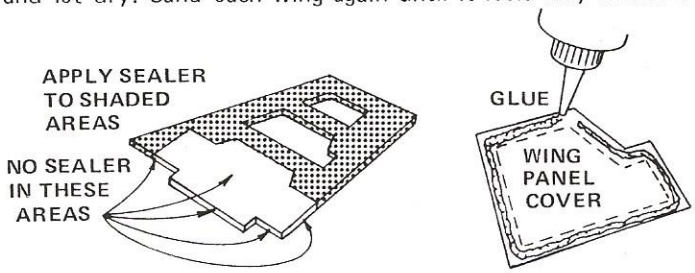

Cut the wing panel covers from the printed sheet (11). These covers are applied to the top surface (the side on which the saddle outline was drawn) of each wing. The dotted lines on the covers are used to line up the panel openings. Read the remainder of this step and study the illustrations before applying any glue. Apply a thin film of white glue to the area of one cover between the edge and the dotted line. Lay the cover, glue side up, on a flat surface. Select an appropriate (right or

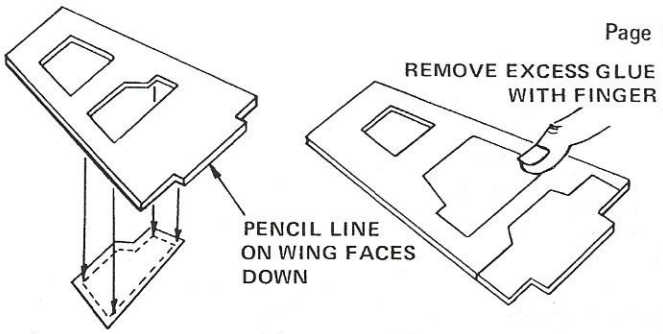

left) wing and place over the cover with the pencil marked side of the wing down. Position the wing so the dotted line shows inside the panel opening and press wing firmly over cover. Turn the assembly over and wipe away any excess glue from around the edges of the cover. Set aside to dry and proceed with another wing and cover assembly. When glue has dried, apply the second cover to remaining panel of each wing.

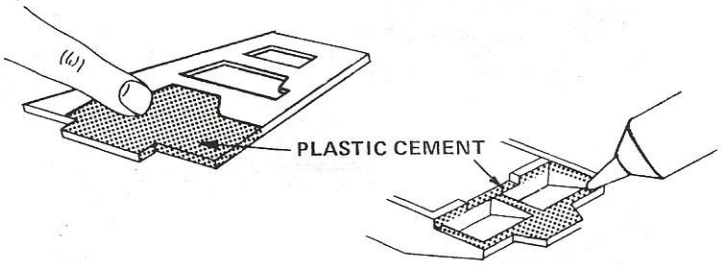

☐ **8** Apply plastic cement to the top of a wing inside the pencil line and to the edges shown shaded in the illustration. Rub the cement into the balsa with your finger. Let the cement dry and apply a second coat over the first. Locate a mating wing saddle and apply plastic cement to the underside of the saddle in the area indicated. Press the parts together and hold until the cement begins to set. Set the assembly aside to dry. Repeat with remaining wings and saddles.

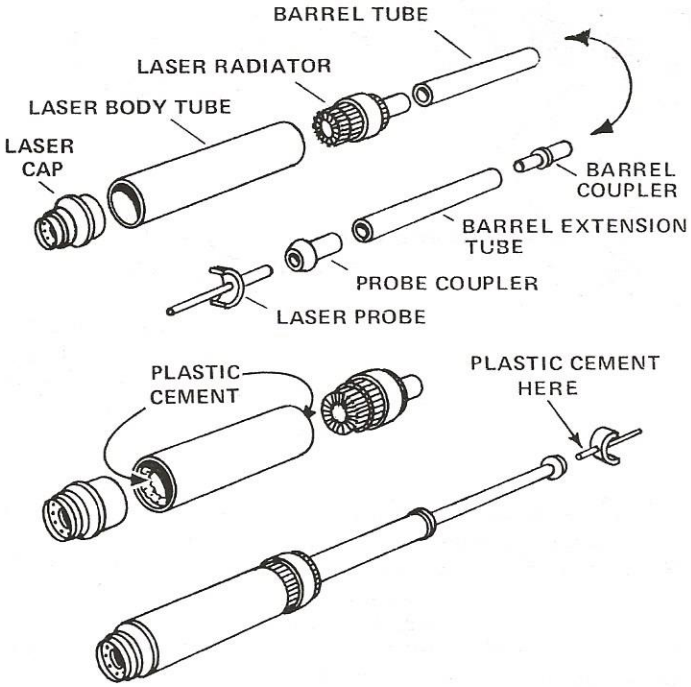

☐ **9** The gluing template (part MM) will be helpful in identifying and assembling the components in this step.

Locate four each of the laser assembly parts shown in the illustration.

Smear a thin film of plastic cement around the inside of both ends of a laser body tube (part T). Let the cement dry, then smear another thin film over the first. Push a laser radiator (part I) into one end of the tube and a laser cap (part J) into

the other end. Using the same cementing technique, attach, in turn, a laser barrel (part S), a barrel coupler (part K), a barrel extension tube (part R) and a probe coupler (part M). Let the unit sit for 1/2 hour. This allows time for cement to dry and for cement fumes to escape from the front of the barrel extension tube. If the laser probe were attached immediately, trapped fumes could prevent the cemented joints from drying indefinitely. Apply plastic cement to the stem of the laser probe (part L) and push into the hole in the probe coupler. Make sure the assembly is straight and set aside to dry. Repeat this step with remaining laser assemblies.

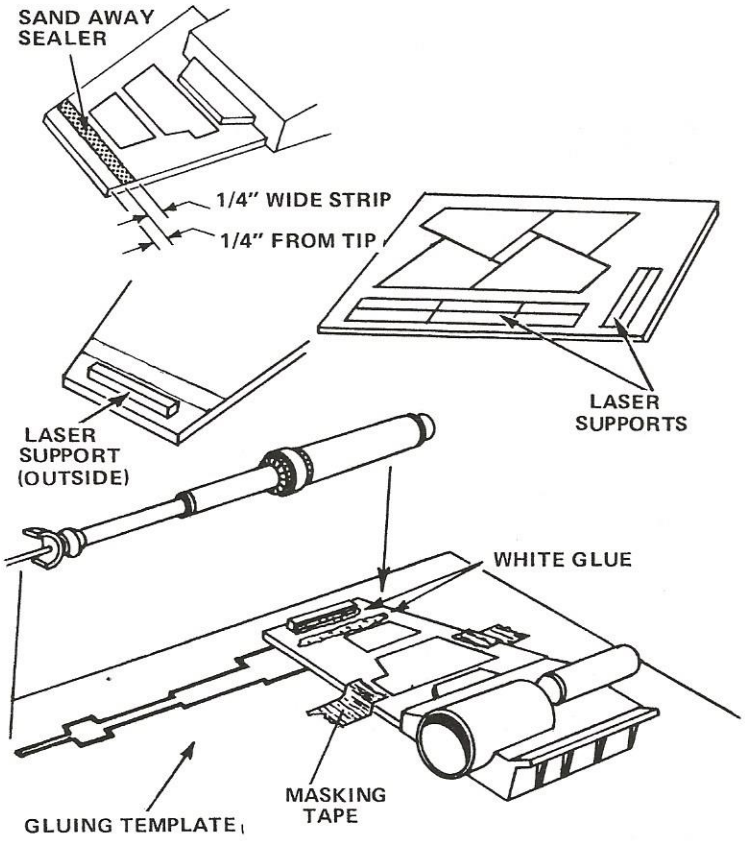

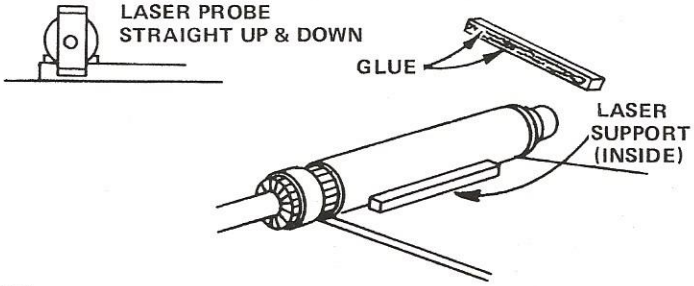

☐ **10** Prior to attachment of the laser assemblies to the wings, sand a strip on the top side only of each wing as shown. Sand hard enough to remove most of the sealer. This will allow a good "bite" for the glue.

Locate the die-cut balsa fin sheet (part CC). Use a sharp knife to remove the eight small (1/8"X1-5/8") laser supports from the sheet. Mark the position of the outside support on each wing according to the alignment lines on the gluing template. Using white glue, attach a support strip to the side of each wing that has paper covers, glued on in step 7. Using masking tape, tape a wing over the correct (right or left) template on the sheet. Avoid getting tape on paper covers. Run a bead of white glue along the inside edge of the support strip and along the wing, 3/8" in from the tip. Place a laser assembly on the wing against the support, with the half moon reflector on the laser probe pointing straight up and down. Align the laser assembly exactly over the outline on the template and hold in place until the glue begins to set. Allow to dry thoroughly, then remove assembly from template.

Apply white glue to two sides of a laser support and glue in place against the inside of the laser body.

Repeat this step with the remaining wing and laser assemblies.

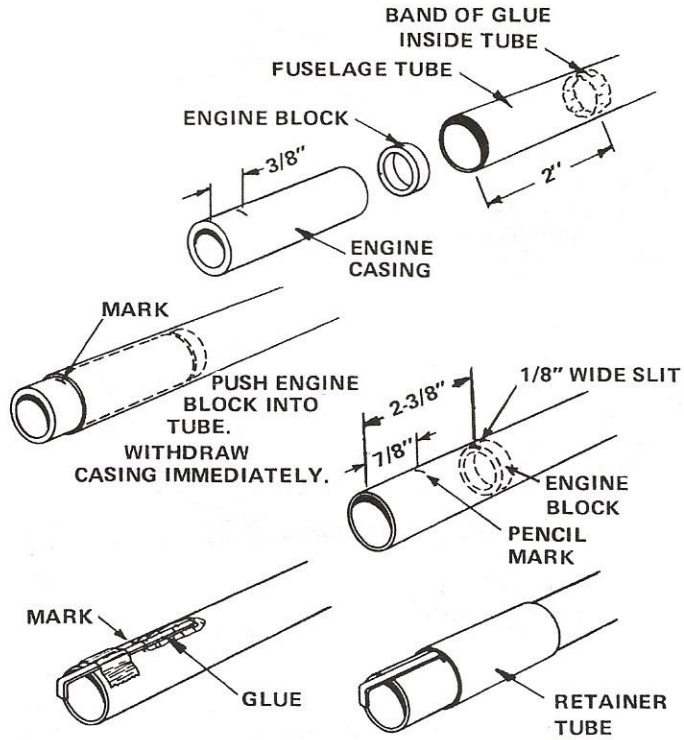

☐ **11** Locate the fuselage body tube (part W), the retainer tube (part X), the engine block (part Y), the engine holder (part Z), and the engine casing (part AA).

Mark the engine casing 3/8" from one end. Using a stick, smear a generous band of white glue inside the fuselage tube about 2" from one end. Insert the engine block into this end of the tube. Use the engine casing to push the block into the tube. Push until the mark on the casing is even with the end of the tube. Do this in one smooth motion. Withdraw the engine casing immediately.

Cut a 1/8" wide slit in the fuselage tube, 2-3/8" from the end. The slit should be even with the rear edge of the engine block. Place a mark on the tube 7/8" from the end. Insert one end of the engine holder into the slit. Temporarily secure the holder with a piece of tape at the bottom of the tube. Smear a heavy film of white glue all around the engine holder above the pencil mark. Slip the retainer tube onto the opposite end of the fuselage tube and slide down until it is even with the mark. Wipe away excess glue and remove tape.

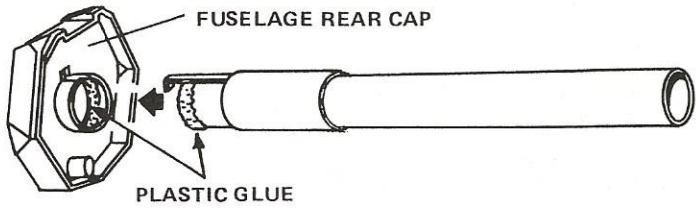

☐ **12** Locate the fuselage rear cap (part D). Smear a small portion of plastic cement around the outside of the rear end of the fuselage body tube for a length of 1/4". Allow to dry. Apply plastic cement around the inside edge of the fuselage rear cap as shown and insert the fuselage body tube being sure the engine hook is centered in the rear cap opening. Push the tube until it stops. Set aside to dry.

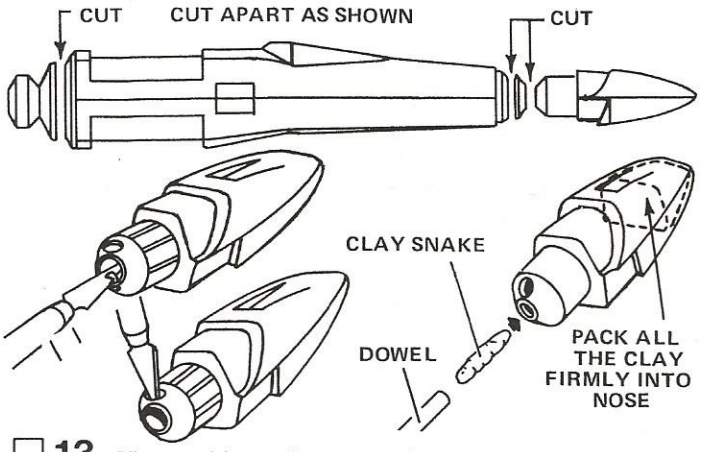

☐ **13** Thoroughly wash fuselage (part A) in lukewarm water to remove any mold release residue. Blot dry. Following the illustration, cut the fuselage apart at the points indicated. A razor saw works best for this. If one is not available, use your model knife and make several light cuts rather than try to cut all the way through at once. Insert the tip of the knife through the opening in the rear of the nose and cut off the ends of the two recessed "dimples". Insert the tip of the blade into each resultant hole and twist to clean away excess plastic from the holes. Install clay weight (part NN) in the nose. Roll the clay into a thin "snake". Cut into 1/2" sections and drop through hole in rear of nose. Pack the clay firmly into the nose using the dowel included in the kit. **BE SURE TO USE ALL THE CLAY INCLUDED IN THE KIT.**

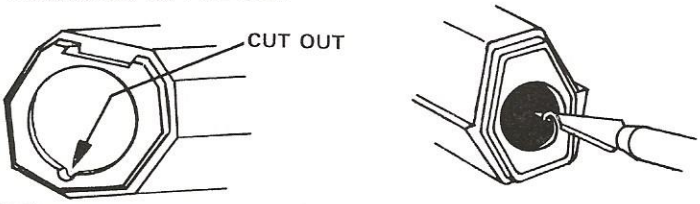

☐ **14** Carefully trim the edges of the opening in the front of the fuselage so the fuselage tube will slip easily through the opening. Cut a small niche in the bottom of the rear of the fuselage to clear the post that extends from the inside of the rear cap.

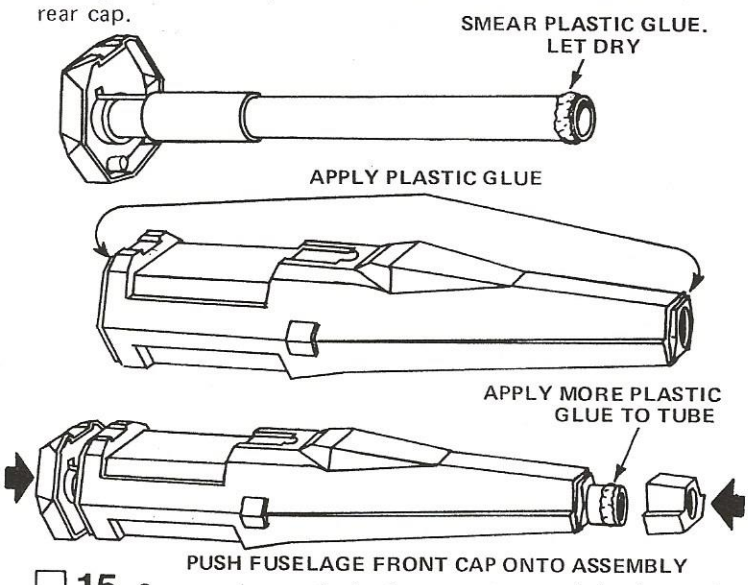

☐ **15** Smear a layer of plastic cement around the forward end of the fuselage tube. Let dry. Apply a bead of plastic glue around both ends of the fuselage. Slide the fuselage tube thru the fuselage from the rear. Place another bead of plastic glue around the front of the fuselage tube and push the forward cap into place. Use the palms of your hands to gently push both ends of the assembly so that front and rear caps are properly seated against the fuselage. Check alignment and let dry.

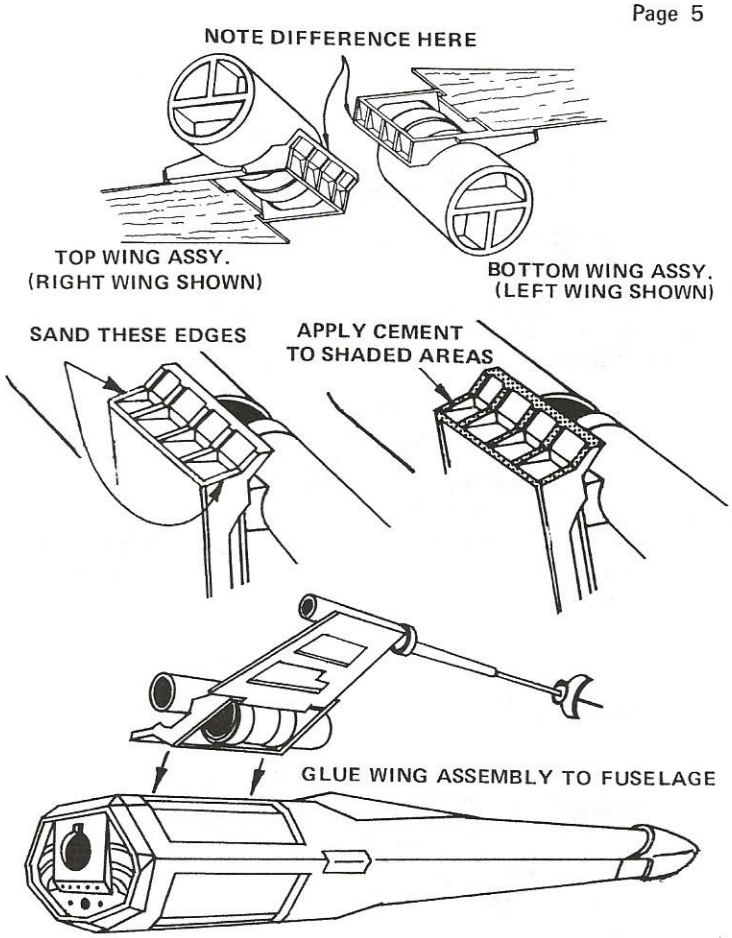

☐ **16** Identify and separate the wing assemblies as shown. Fit the top right wing assembly into the recessed area provided in the fuselage. Check the fit. If the wing saddle does not nest correctly into the fuselage, use sandpaper to round the rear edges of the saddle. Fit and sand until a perfect fit results.

Apply plastic cement to the areas shown and attach the wing to the fuselage. Hold in place until the cement begins to set, then lay unit aside until the cement is thoroughly dry. Repeat this step with the remaining wing assemblies.

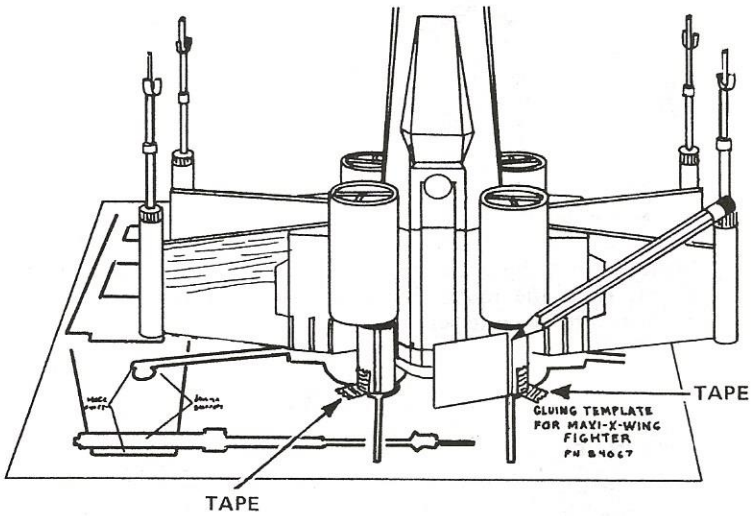

☐ **17** Set the model upright on the top view drawing on the gluing template. Position the model exactly over the drawing and tape the sides of the afterburner tubes to the template. Use a triangle or some object with a straight 90° angle to draw a line upon the tubes directly above the fin positions on the template.

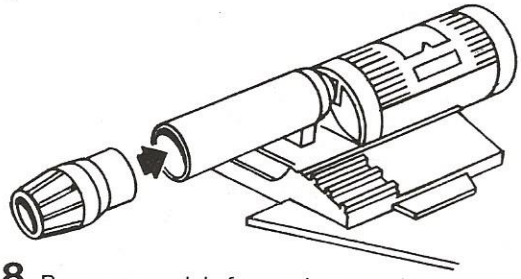

☐ **18** Remove model from the template and attach the afterburner nozzles (part Q) to the rear of the afterburner tubes. Use plastic cement and the same cementing procedure as outlined in step 9.

☐ **19** Remove the four auxilary fins from the balsa sheet. Seal and sand fins until finish is smooth. Do not get any sealer on the edge that glues to the body (root edge).

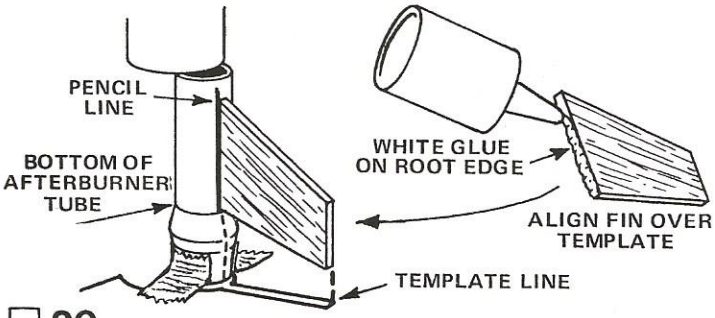

☐ **20** Reposition the model on the gluing template and tape in place with masking tape. Apply white glue to the root edge of a fin and attach to afterburner body as shown. Looking down on assembly from above, move the tip of the fin until it is lined up over the template. Hold in place until glue begins to set. Repeat with remaining fins. Periodically check fins to make sure they are still lined up over template. Allow to dry for an hour before proceeding.

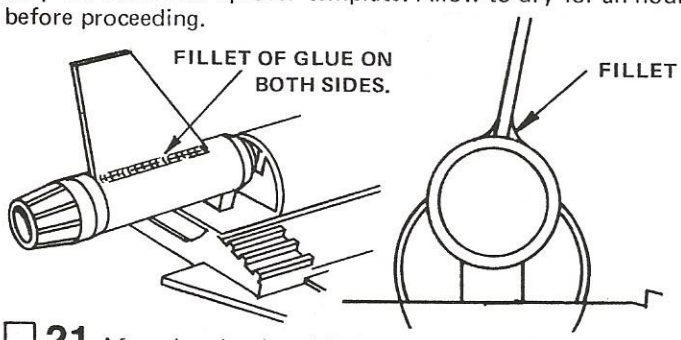

☐ **21** After the glue has dried, remove the model from the template. Run a bead of white glue along both sides of each fin/tube joint. Smooth the glue into an even fillet with your finger. Hold the model horizontally for several minutes to allow glue to begin to set.

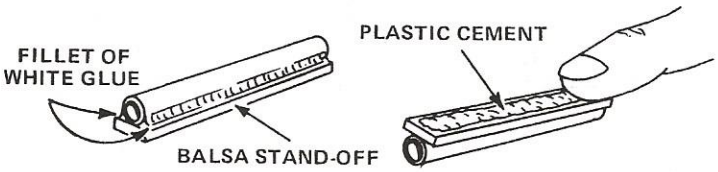

☐ **22** Remove the launch lug stand-off (3/16"X3-5/8") from the balsa sheet. Using white glue, attach the launch lug (part DD) to this. Allow to dry, then fillet both sides with white glue. Let dry.

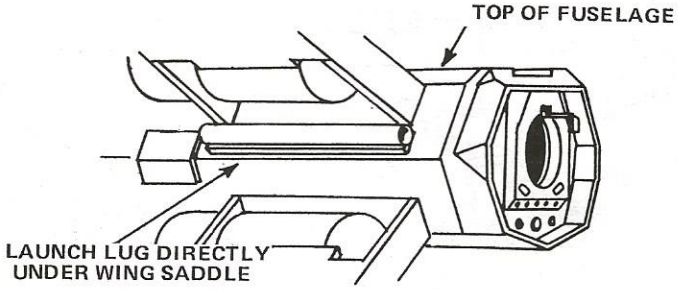

Smear a film of plastic cement on the back side of the balsa. Allow to dry, apply more plastic cement and attach to fuselage in position shown.

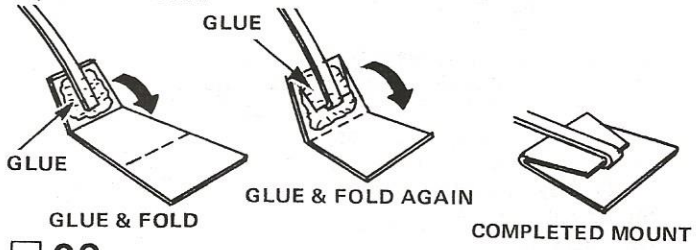

☐ **23** Cut the shock cord mount from the printed sheet (part II) crease by folding on dotted lines. Spread white glue on section 1 and lay the end of the shock cord (part HH) in the glue. Fold over and apply glue to the back of section 1 and the exposed part of section 2. Lay the shock cord as shown and fold again. Hold unit tightly together until glue sets.

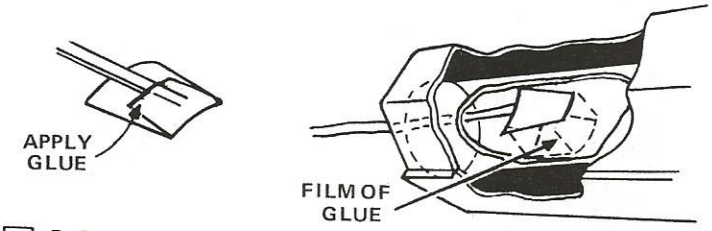

☐ **24** Form the mount into a slight curve as shown. Apply glue to the mount and insert in top of fuselage tube. Press in place 1-1/2" below top of tube. Hold in place till glue dries. Smear a thin film of glue over all edges of mount.

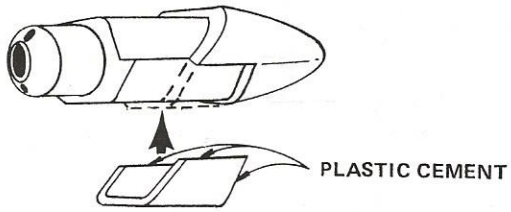

☐ **25** Using plastic cement, attach the fuselage nose extension (part B) to the bottom of the nose cone. Wipe away any excess cement.

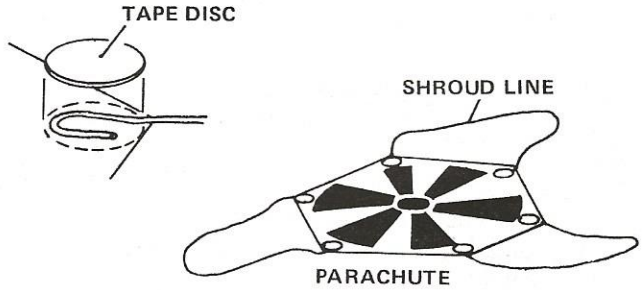

☐ **26** Locate two parachutes (part EE), the two lengths of shroud line (part FF) and two strips of tape discs (part GG). Cut out and assemble the parachutes according to instructions printed on the parachute material. Be sure the ends of the shroud lines are properly positioned and that the tape discs are firmly attached.

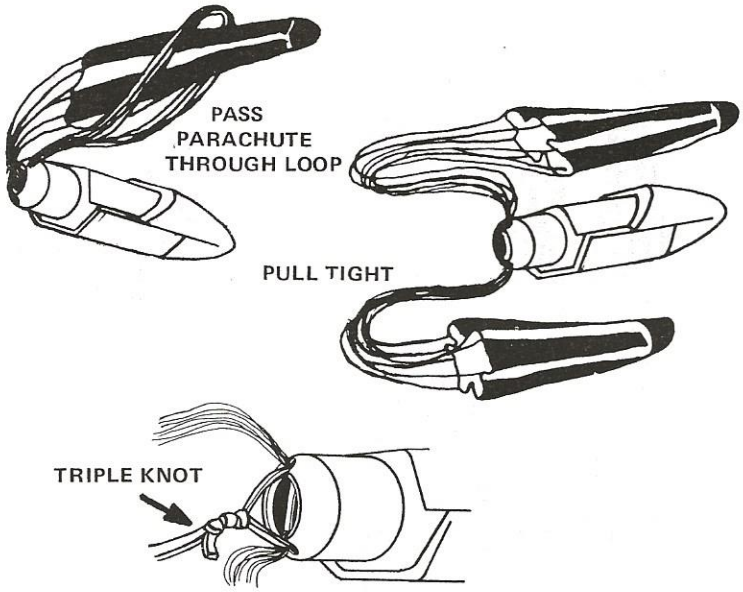

☐**27** Attach the parachute to the nose cone. Gather the shroud line loops of one 'chute and pass them through one of the holes in the rear of the nose. Pass the 'chute canopy through the loops and pull the lines taut. Set with a drop of white glue on the knot. In the same manner, attach the second 'chute to the other hole in the nose. Pass the loose end of the shock cord through both holes and tie in a triple knot.

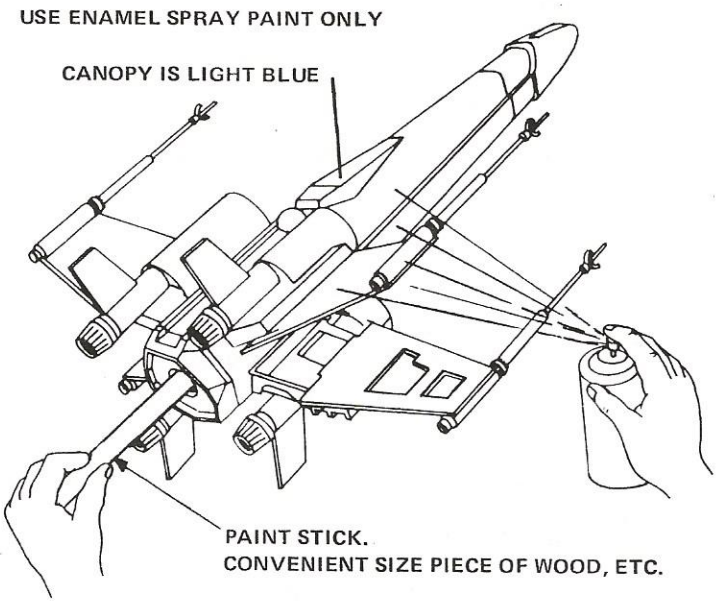

☐**28** Fold the parachutes and install them with the shroud lines and shock cord in the body tube. Insert the nose cone. Carefully wipe all plastic parts with a damp cloth to remove oily fingerprints or mold release residue. Mount the model on a paint stick and give the model two very light coats of flat white enamel. Allow 10 minutes drying time between coats.

> Do not apply too much paint. Paint is heavy and this model has a large surface area. An excessive amount of paint could cause your X-Wing to be a poor performer in flight.

When the paint is dry, brush paint the canopy a very light blue. Use the lines at the base of the canopy as a guide in applying the blue paint. Allow the paint to dry several hours before applying decals.

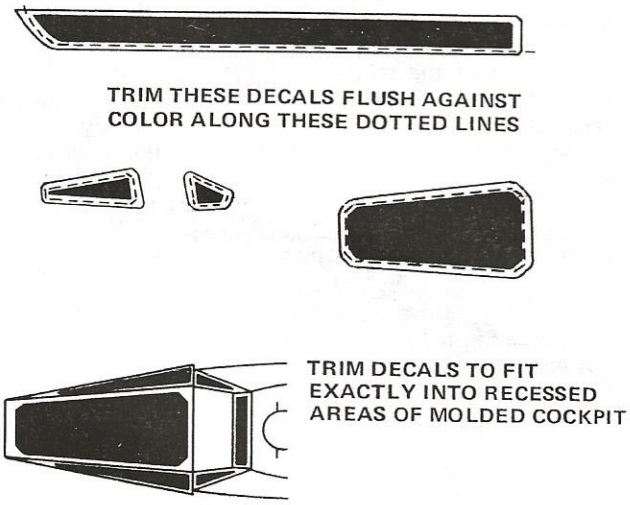

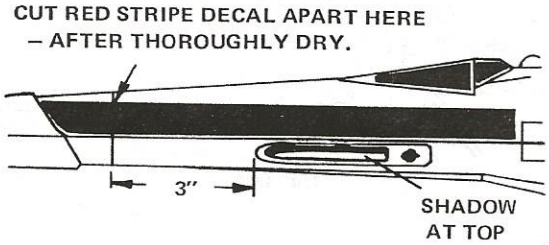

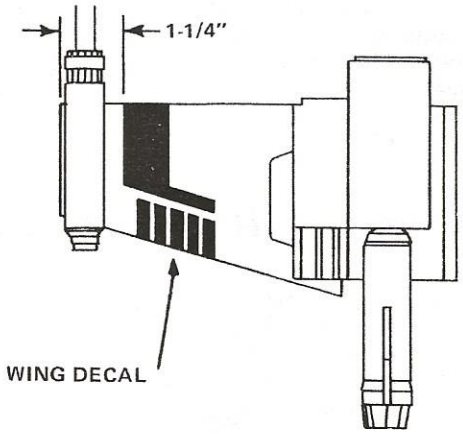

☐**29** When paint is thoroughly dry, apply decals. Locate the decal sheet (part JJ). Using a straight edge and knife, carefully cut out the cockpit window decals. Cut flush against the colored areas. Before dipping decals in water, set in place on fuselage. If the decals do not fit exactly into the recessed areas of the molded cockpit, trim the edges of the decals to obtain a good fit. Note that the side windows are in right and left side pairs. Work with one side only at a time so you don't get them mixed up. When you are satisfied with the fit of each window decal, dip in water for 30 seconds or until decal slides on paper backing. Carefully slide the decal off the backing and onto the desired surface. Position decal exactly and gently blot dry with a clean cloth. As you proceed with application of the rest of the decals, be careful not to handle the areas where decals have been applied. You could accidently move a decal from its proper position.

Next, apply the red side stripes. Trim the bottom and

front edge of each stripe close to the colored area (as shown) so the decal will fit neatly against the shelf on the fuselage side. Pre-position the stripes on the fuselage so you can see exactly where they are going to fit (see illustration). Apply one stripe at a time. Dip in water as before. Slide the stripe from the backing and onto the fuselage at the front where the curved end of the stripe fits into the lip on the nose. Work rearward, sliding backing away and smoothing decal onto surface. Gently smooth out air bubbles and blot dry.

Apply the torpedo port decals in the position shown. Again, these are right and left side decals. The dark shadow area should be at the top. Note that the torpedo port and the red arrow are both on the same piece of clear decal material. DO NOT CUT THESE APART. They should be applied as a single decal. Cut out the red wing decals. Trim the top and bottom edges flush with the red material. Dip and apply the wing decals in the position shown. There are two right and two left wing decals, so match them to the correct wings.

Allow the decals to dry, then cut through the red stripes at the nose separation point.

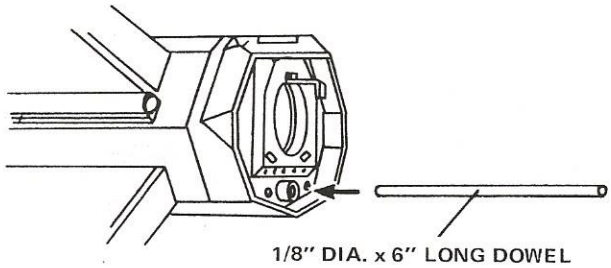

☐ **30** A 1/8" dia. X 18" long dowel is included in the kit. Cut this dowel into three 6" lengths. Before launching, insert a dowel into the socket in the rear of the fuselage. This will serve as a probe to ease landing shock and prevent damage to the afterburners. If a dowel breaks, you have two spares. Additional dowels may be purchased at most building supply and hardware stores.

COUNTDOWN CHECKLIST

Be sure to follow the *HIAA-NAR Model Rocketry Safety Code when carrying out your model rocket activities.

*HIAA-NAR - Hobby Industry Association of America
- National Association of Rocketry

SPECIAL NOTE:
This model should not be flown in a wind above a light breeze. The reason for this is as follows: Being a scale replica of the craft used in the movie, this model has many details and extensions not found on more conventional model rockets. In particular are the afterburner engines which extend aft of the main fuselage. The landing probe (wood dowel) is designed to protect these units upon landing. In a light breeze, the X-Wing will float straight down with the landing probe making contact with the ground first. The replacable probe absorbs the initial landing shock, sparing the afterburners from this chore.

In a moderate breeze, the large wings and dual parachutes will "catch" the wind and the craft will descend at an angle. The afterburners could make initial ground contact and damage might result.

T-14 Pack four or five squares of loosely crumpled recovery wadding into body tube.

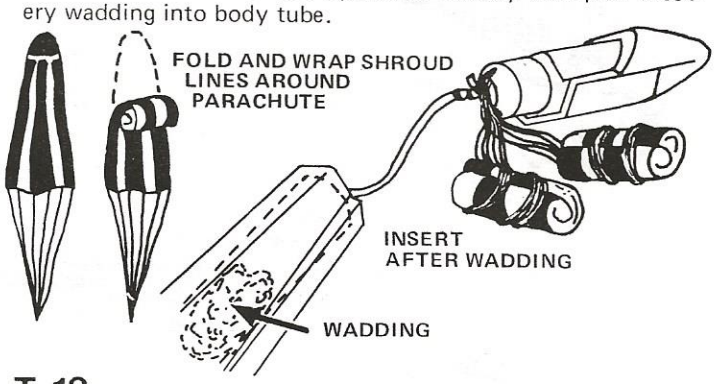

T-13 Fold the parachutes into a triangular shape. Roll 'chutes tightly as shown and wrap shroud lines around them. Slide 'chutes into body above wadding. If 'chutes are too large, unroll and repack until they slide easily into rocket. A fit that is too tight may prevent parachutes from ejecting properly.

NOTE: DO NOT pack parachutes until you are actually ready to launch. For maximum parachute reliability, lightly dust 'chutes with ordinary talcum powder, especially in cold weather.

T-12 Pack shock cord neatly into rocket, then slide nose cone into place. Nose cone should separate easily from rocket body tube, but should not be extremely loose. If it is too tight, sand inside of body tube end and shoulder of nose cone with extra fine sandpaper.

T-11 Select an engine and install an igniter as directed in the engine instructions. Engine recommended for use with this rocket is D12-3.

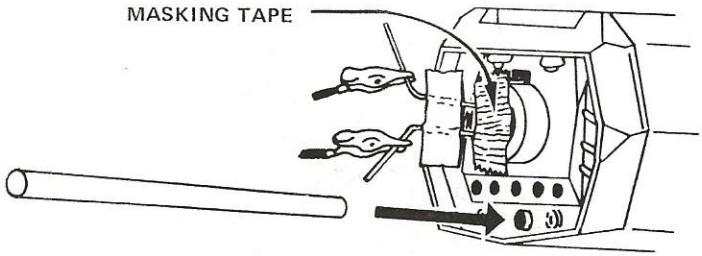

T-10 Insert engine into rocket. Engine hook must latch securely over end of engine. INSERT DOWEL INTO SOCKET.

T-9 Disarm launch panel--remove safety key.

T-8 Place rocket on launch pad, making sure rocket slides freely on launch rod. Clean micro-clips and attach them to igniter leads.

T-7 Clear the launch area, alert recovery crew and trackers. Check for low flying aircraft and unauthorized person in recovery area.

T-6 Arm launch panel--insert safety key.

-5-4-3-2-1-LAUNCH!!

MISFIRE PROCEDURE

Occasionally an igniter will heat and burn into two parts without igniting the engine. This is almost always caused by a failure to install it correctly. Disarm launch panel, remove the model, clean igniter residue from nozzle, and install a new igniter. Follow launching procedure again.

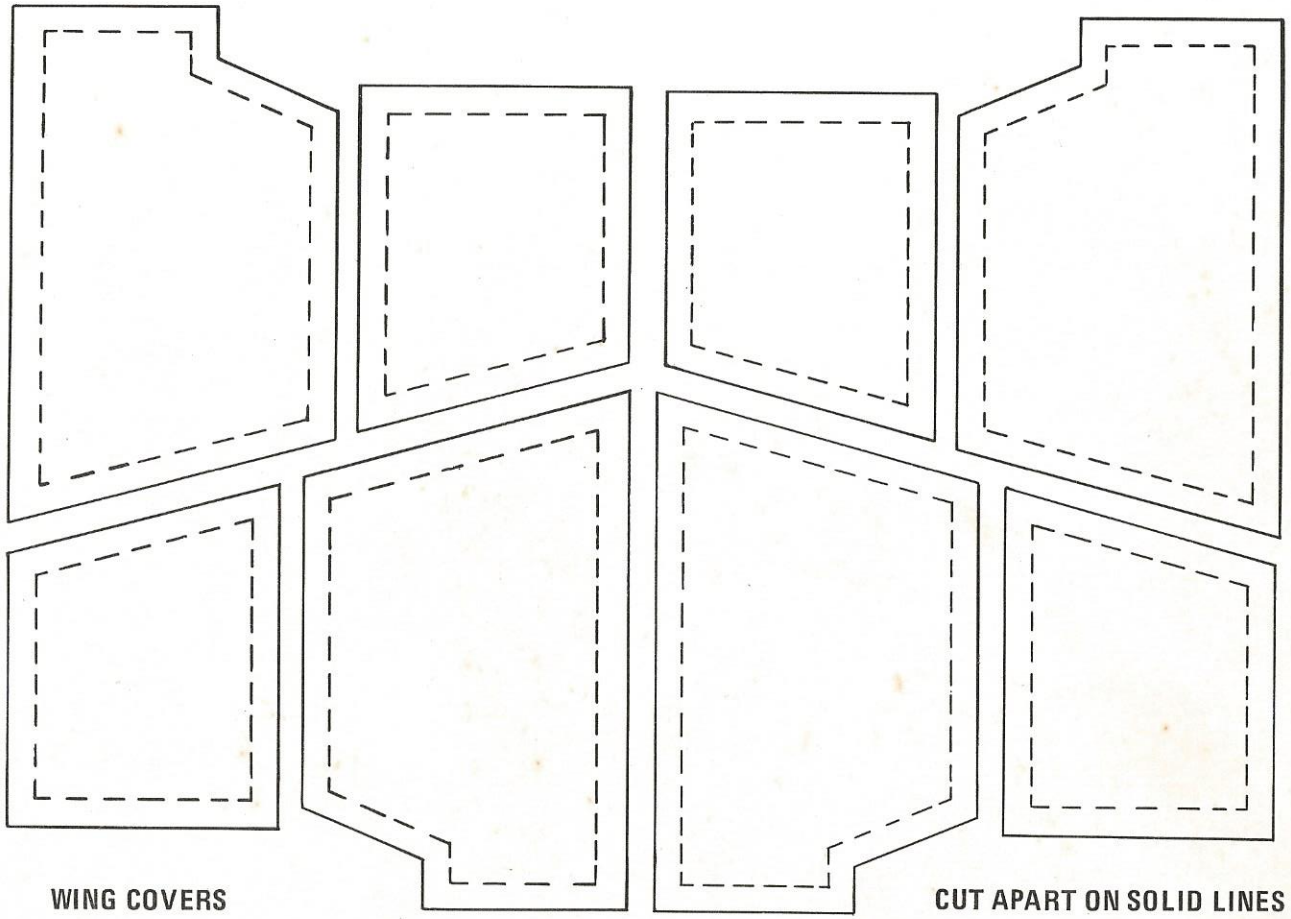

WING COVERS

CUT APART ON SOLID LINES

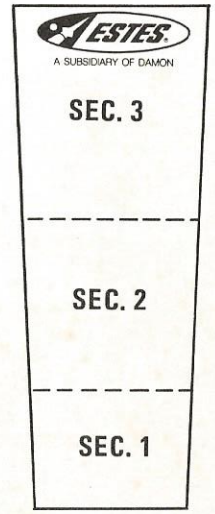

SHOCK CORD MOUNT

PN84077
MAXI X-WING
ESTES INDUSTRIES

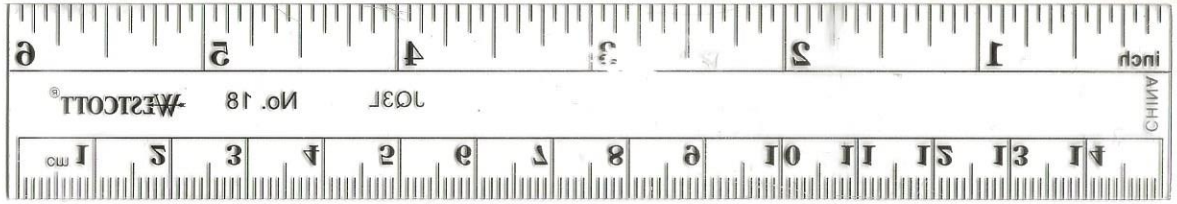

STAR WARS™

ESTES® A SUBSIDIARY OF DAMON

MAXI X-WING Fighter DISPLAY STAND

IMPORTANT—READ THIS FIRST

- Use a sharp knife to free parts from the die-cut sheet.
- Remove parts from the sheet only as they are required. It may be difficult to identify parts if they are all removed at one time.
- Use "white glue" for all assembly steps. Smooth the glue into an even film on the gluing tabs.
- Avoid getting any glue on the outside, printed surfaces.
- Allow glue to dry completely after each step.
- Read each step and study the accompanying illustration(s) before gluing.

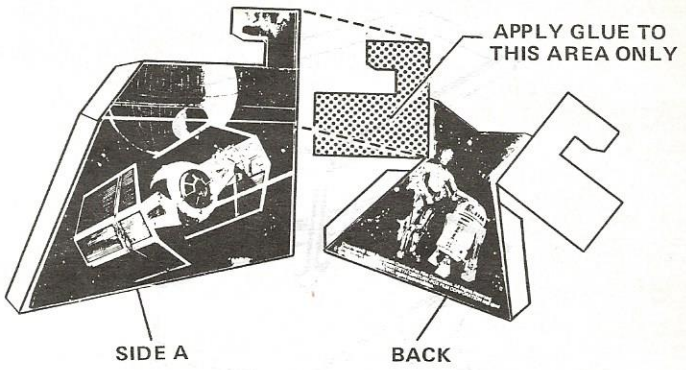

☐ **1** Parts required: back and side 'A'. Lay the back on a flat surface with the printed side up. Apply white glue only in the area indicated. Place side 'A', with printed side up, over this. Line up die-cut edges exactly. Weight with a heavy book and let glue dry.

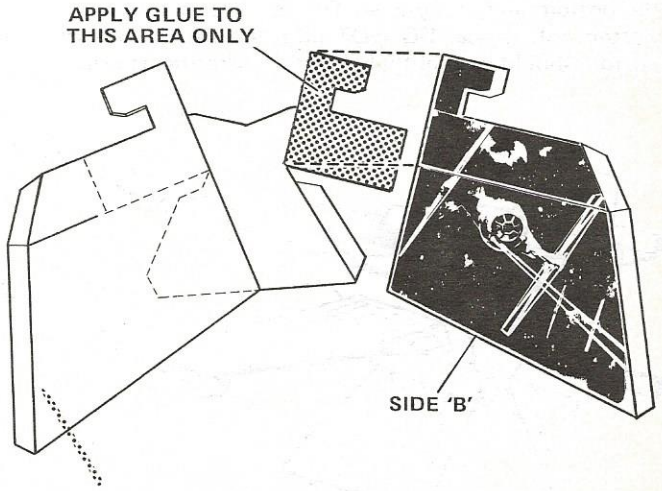

☐ **2** Part required: side 'B'. Glue side 'B' to the opposite side of the back in the same manner as in step 1. Weight and let dry thoroughly.

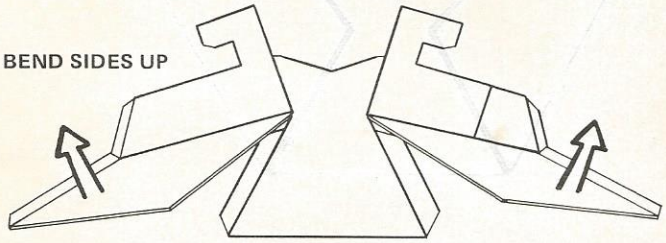

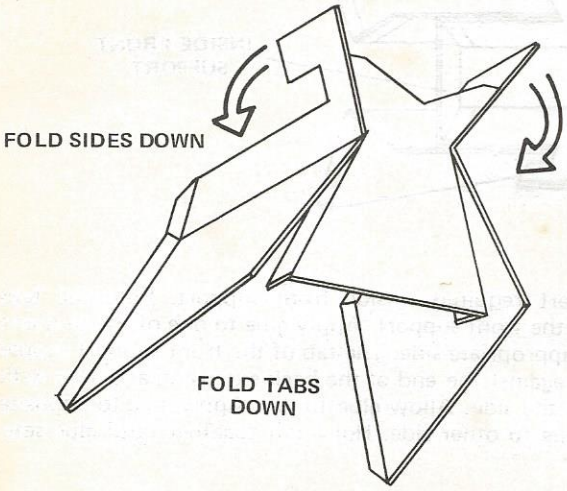

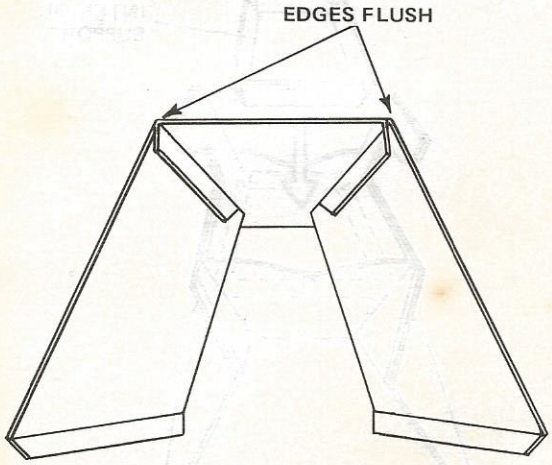

☐ **3** Bend the lower portions of the sides upward along scored lines. Fold sides down. Fold down the tabs on the lower portion of the back. Glue these tabs to the inside surfaces of the sides. Make sure the edges are flush. Hold the tabs against the sides until the glue sets.

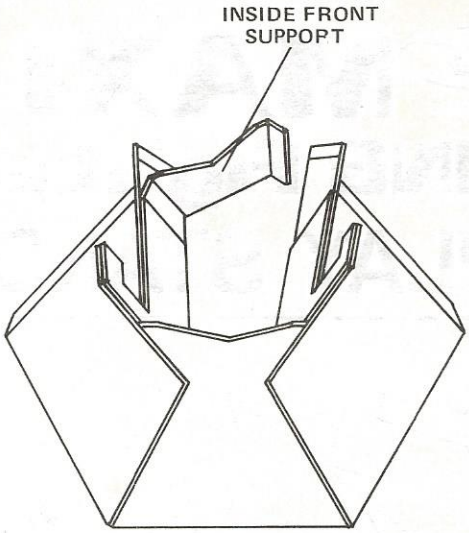

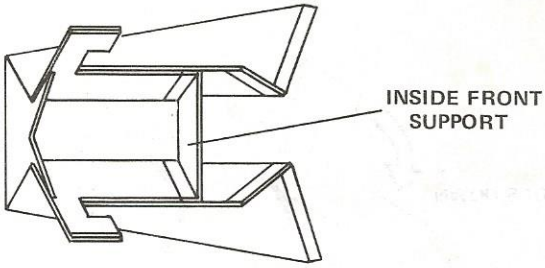

☐ **4** Part required: inside front support. Fold the tabs inward on the front support. Apply glue to one of the tabs and attach to appropriate side. The tab of the front support should be butted against the end of the back extension and even with the top of the side. Allow glue to dry. Apply glue to opposite tab and glue to other side. Hold unit together until glue sets.

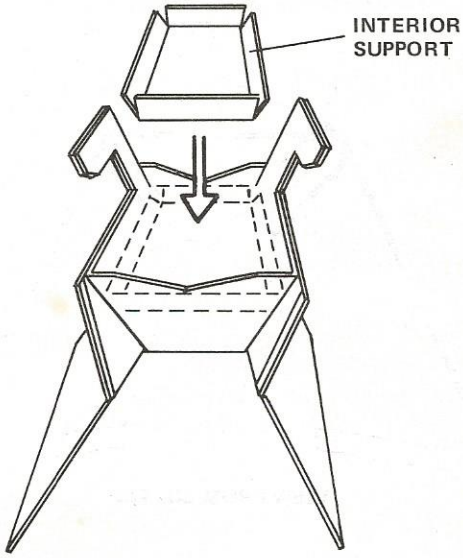

☐ **5** Part required: interior support. Fold four tabs up on interior support. Apply glue to tabs and push into place as shown. NOTE - DO NOT push too hard. The tops of the support tabs should be slightly below the tops of the surrounding walls.

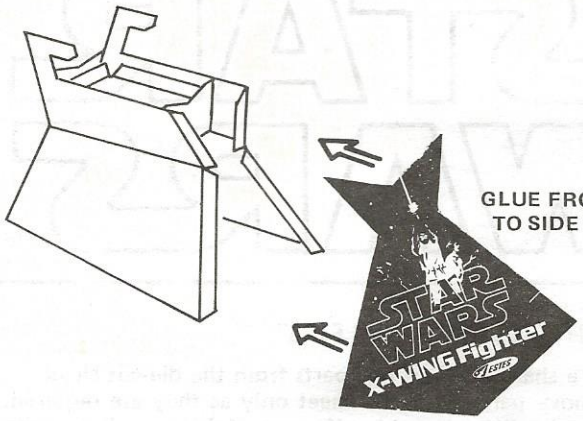

☐ **6** Part required: front. Bend the tabs on the front of side 'A' inward apply glue to tabs and attach front. Make sure all edges are lined up and hold in place until glue begins to set. Put aside to allow glue to dry.

Fold the tabs inward on side 'B', fold the front along the scored line and glue together.

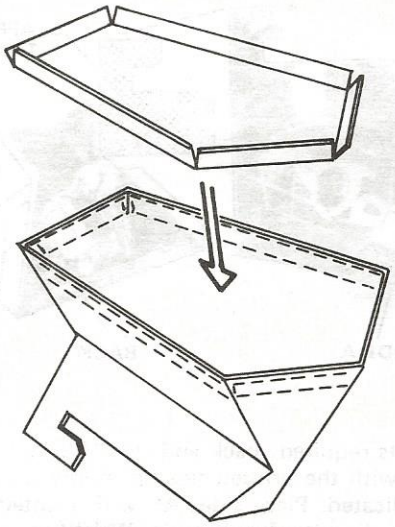

☐ **7** Part required: bottom. Fold down the gluing tabs on the bottom and apply glue. Turn display stand over and push bottom into place. DO NOT push too hard. The tabs on the bottom should be slightly below the surrounding walls.

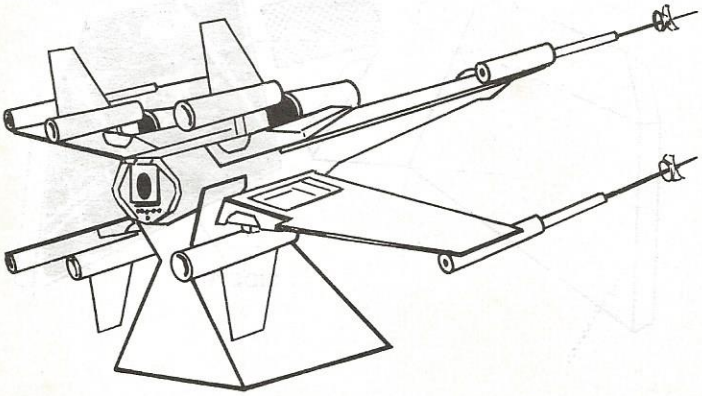

☐ **8** Place the X-Wing Fighter on the display stand. Slide fighter back until tabs lock over the bottom wing saddles.